Borrum Series

LOW-CHARGE AIR-COOLED CONDENSERS

- LOW-CHARGE MICROCHANNEL HEAT EXCHANGERS
- OPTIMIZED FOR LOW-GWP REFRIGERANTS
- HIGHLY EFFICIENT EC-MOTOR FANS
- LOWER WEIGHT, REDUCED SIZE

TECHNICAL MANUAL
ENGLISH

10-100kW Low-GWP

EC FANS MCHE HFC HFO

WWW.KALTRA.COM

KALTRA

MODEL IDENTIFICATION

Borrum	MC	F	2000	.	2	-	E	63	-	2	-	3	/	N	-	1	-	R449a

Heat exchanger type	MC	Microchannel aluminium coil
Unit shape	F	Flat
Coil length		mm
Number of passes		
Fan motor type	E	EC-motor
	A	AC-motor
Fan diameter		cm
Number of fans		
Power supply	1	230V/1Ph/50Hz
	3	400V/3Ph/50Hz
Noise level	N	Normal
	L	Low
	U	Ultra-low
Number of circuits		
Refrigerant type		ASHRAE number

The model code can be found on the name plate under the cover of electrical box of the unit:

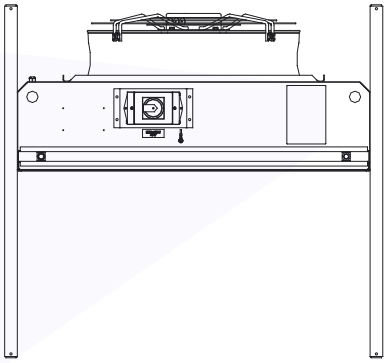

UNIT COMPONENTS AND CONSTRUCTION

Painted Galvanized Steel Enclosure

The unit shall be coated with epoxy baked powder paint to provide a durable finish. The paint color shall be Signal White (RAL 9003) or similar.

Multi-position Legs

Multi-position fixing legs shall be supplied attached to the unit via captive bolts and shake-proof washers, depending on loading scheme. Unit legs shall be repositioned on site to offer vertical or horizontal air discharge mode.

Electronically Commutated (EC) Fan Motor

The fans shall incorporate external EC rotor motor technology to provide highly accurate discreet speed control. The fans offer maximum airflow performance while keeping sound levels to a minimum.
Each fan shall incorporate electronically commutated DC motor control using semiconductor modules responding to a signal from the indoor unit or an independent control module for standalone units.

Microchannel Heat Exchanger

Large surface area heat exchanger positioned to optimise airflow and heat transfer, shall be manufactured from microchannel coil with multi-port flat tubes and louvered fins, optionally epoxy coated. The factory test pressure shall not be less than 45 bar.

Electrical Components and Wiring - Optional

All electrical components shall be rated for all year round outdoor use. All wiring (optional) shall be color coded and numbered for identification. All units shall be wired in accordance with current European standards.

Main Electric Isolator - Optional

A weatherproof mains isolator shall be fitted to ensure complete unit isolation of the electrical panel during adjustment and maintenance.

Inert Holding Charge

The unit shall be shipped with a holding charge of inert gas.

Head Pressure Control - Optional

Head pressure control shall be fitted to the condenser for low-ambient operation. Head pressure control utilizes a pressure differential valve that responds to changes in the pressure difference across the valve. When the differential reaches setpoint, the control valve starts to open and bypasses hot gas to the liquid line. As the differential increases, the valve opens further until its full stroke is reached.

Coil Guard - Optional

Protective mesh guards can be fitted to each of the outer coils to protect against damage and shall be removable.

Air Filtration - Optional

The air filtration media shall be heavy duty commercial grade polycarbonate that can be removed for maintenance purposes.

Epoxy Coating - Optional

Epoxy electrocoated microchannel heat exchanger offers the ultimate corrosion and chemical resistance, provide excellent salt spray and humidity resistance and exhibit outstanding performance over aluminium.

Shut-off Valves - Optional

The unit can be fitted with shut-off valves on liquid and discharge lines.

Discharge Air Plenum - Optional

Factory fitted, constructed from galvanized sheet steel and coated with epoxy baked powder paint, this plenum shall direct discharge air vertically which reduces air recirculation and provides a degree of acoustic reduction in the horizontal plane.

Fan Diffusers - Optional

Factory fitted fan diffusers to boost fan efficiency and reduce the operating noise of the unit.

Refrigerant Gas Leakage Detection - Optional

Gas-specific, factory-calibrated refrigerant gas leak detection system designed to meet the needs of the F-Gas regulations. The detector can be integrated into third party monitoring and/or BMS system.

Variable Speed Control - Optional

The fan speed is controlled via alteration of the supply voltage which corresponds to a particular condensing pressure. The pressure set point corresponding to the maximum output voltage can be adjusted by means of a potentiometer internal to the case of the controller.

Mini-receiver - Optional

Mini-receiver is based on a oversized coil manifold to accumulate and hold liquid refrigerant. Excess refrigerant charge is allowed to backup into the lower manifold, and help optimize the system charge and operation. This feature improves part-load operation and helps reduce critical charging of the system.

Unit model	400mm EC fans	500mm EC fans	630mm EC fans
Painted galvanized steel enclosure	■	■	■
Multi-position legs	■	■	■
Electronically commutated (EC) fan motors	■	■	■
Microchannel heat exchanger	■	■	■
Schrader valves on liquid/discharge lines	■	■	■
Electrical components and wiring	□	□	□
Main electric isolator	□	□	□
R407c refrigerant	■	■	■
R449a refrigerant	■	■	■
R454a refrigerant	■	■	■
R454c refrigerant	■	■	■
Other HFC/HFO refrigerants	□	□	□
Head pressure control (loose)	□	□	□
Coil guard	□	□	□
Air filtration	□	□	□
Coil epoxy coating	□	□	□
Shut-off valves (loose)	□	□	□
Discharge air plenum	–	□	□
Fan diffusers	–	□	□
Refrigerant gas leakage detection	□	□	□
Variable speed control w/ Modbus	–	□	□
Mini-receiver	□	□	□

■ Standard features
□ Optional features
– Feature not available

TECHNICAL DATA - 400MM FAN UNITS

Borrum Series		MCF 750.4-EC40-1-1/N-1	MCF 1500.4-EC40-2-1/N-1	MCF 2000.2-EC40-3-1/N-1
Performance R410a - GWP=2088				
Heat rejection	kW	10.8	22.3	33.4
Refrigerant pressure drop	kPa	4.2	51.4	21.8
EER	kW/kW	192.9	199.1	198.8
Performance R407c - GWP=1774				
Heat rejection	kW	8.8	18.2	27.6
Refrigerant pressure drop	kPa	6.9	41.1	22.0
EER	kW/kW	157.1	162.5	164.3
Performance R449a - GWP=1397				
Heat rejection	kW	8.9	18.3	27.6
Refrigerant pressure drop	kPa	7.8	40.1	21.3
EER	kW/kW	158.9	163.4	164.3
Performance R454a - GWP=239				
Heat rejection	kW	8.8	18.1	27.3
Refrigerant pressure drop	kPa	7.5	39.1	19.3
EER	kW/kW	157.1	161.6	162.5
Performance R454c - GWP=146				
Heat rejection	kW	9.2	19.0	28.6
Refrigerant pressure drop	kPa	8.8	51.4	26.0
EER	kW/kW	164.3	169.6	170.2
Dimensions and weight				
Length	mm	850	1500	2140
Width	mm	775	775	775
Height w/o legs	mm	414	414	414
Height w/ legs	mm	779	779	779
Net weight	kg	50	85	120
Connections				
Outlet - liquid line	inch	5/8″	5/8″	7/8″
Inlet - gas line	inch	3/4″	3/4″	1″
Heat exchanger(s)				
Quantity		1	1	1
Face area	m²	0.46	0.91	1.35
Coil volume	L	1.7	2.8	3.8
Inlet air velocity	m/s	1.5	1.5	1.5
No. of circuits		1	1	1
Fan(s) - EC-type				
Quantity		1	2	3
Diameter	mm	400	400	400
Airflow - total	m³/s	2500	5000	7500
Rotation speed	RPM	1235	1235	1235
Motor size	kW	0.17	0.17	0.17
External static pressure	Pa	60	60	60
Electrical				
Mains supply		230V/1Ph/50Hz	230V/1Ph/50Hz	230V/1Ph/50Hz
Power input - total	kW	0.06	0.11	0.17
Current - total	A	0.5	1.0	1.6

Condensing temperature: 50°C; Subcooling: 0K; Ambient temperature: 35°C; Air humidity: 50%

TECHNICAL DATA - 500MM FAN UNITS

Borrum Series		MCF 1000.4-EC50-1-1/N-1	MCF 2000.2-EC50-2-1/N-1	MCF 3000.2-EC50-3-1/N-1
Performance R410a - GWP=2088				
Heat rejection	kW	28.4	57.3	86.0
Refrigerant pressure drop	kPa	26.7	25.2	71.1
EER	kW/kW	73.8	74.4	74.5
Performance R407c - GWP=1774				
Heat rejection	kW	23.2	46.6	69.8
Refrigerant pressure drop	kPa	19.6	21.0	55.3
EER	kW/kW	60.3	60.5	60.4
Performance R449a - GWP=1397				
Heat rejection	kW	23.3	46.9	70.2
Refrigerant pressure drop	kPa	21.9	21.4	57.0
EER	kW/kW	60.5	60.9	60.8
Performance R454a - GWP=239				
Heat rejection	kW	23.1	46.5	69.5
Refrigerant pressure drop	kPa	18.7	20.3	53.5
EER	kW/kW	60.0	60.4	60.2
Performance R454c - GWP=146				
Heat rejection	kW	24.3	48.6	72.1
Refrigerant pressure drop	kPa	25.6	25.7	67.2
EER	kW/kW	62.9	63.1	62.4
Dimensions and weight				
Length	mm	1080	2010	2950
Width	mm	1165	1165	1165
Height w/o legs	mm	461	461	461
Height w/ legs	mm	1087	1087	1087
Net weight	kg	82	139	206
Connections				
Outlet - liquid line	inch	5/8″	1″	1-1/4″
Inlet - gas line	inch	3/4″	1-1/4″	1-1/4″
Heat exchanger(s)				
Quantity		1	1	1
Face area	m²	0.97	1.96	2.94
Coil volume	L	3.2	5.5	7.8
Inlet air velocity	m/s	2.0	2.0	2.0
No. of circuits		1	1	1
Fan(s) - EC-type				
Quantity		1	2	3
Diameter	mm	500	500	500
Airflow - total	m³/s	7000	14000	21000
Rotation speed	RPM	1280	1280	1280
Motor size	kW	0.62	0.62	0.62
External static pressure	Pa	20	20	20
Electrical				
Mains supply		230V/1Ph/50Hz	230V/1Ph/50Hz	230V/1Ph/50Hz
Power input - total	kW	0.39	0.77	1.16
Current - total	A	1.7	3.4	5.1

Condensing temperature: 50°C; Subcooling: 0K; Ambient temperature: 35°C; Air humidity: 50%

TECHNICAL DATA - 630MM FAN UNITS

Borrum Series		MCF 1000.4-EC63-1-1/N-1	MCF 2000.2-EC63-2-1/N-1	MCF 3000.2-EC63-3-1/N-1
Performance R410a - GWP=2088				
Heat rejection	kW	37.3	75.3	112.3
Refrigerant pressure drop	kPa	42.3	39.2	109.7
EER	kW/kW	79.2	79.9	79.5
Performance R407c - GWP=1774				
Heat rejection	kW	30.3	61.0	89.5
Refrigerant pressure drop	kPa	31.8	31.2	86.3
EER	kW/kW	64.3	64.8	63.3
Performance R449a - GWP=1397				
Heat rejection	kW	30.5	61.4	89.9
Refrigerant pressure drop	kPa	32.7	32.0	90.0
EER	kW/kW	64.8	65.2	63.6
Performance R454a - GWP=239				
Heat rejection	kW	30.2	60.8	89.2
Refrigerant pressure drop	kPa	29.7	30.2	86.0
EER	kW/kW	64.1	64.5	63.1
Performance R454c - GWP=146				
Heat rejection	kW	31.6	63.6	91.4
Refrigerant pressure drop	kPa	38.9	38.8	104.7
EER	kW/kW	67.1	67.5	64.7
Dimensions and weight				
Length	mm	1080	2010	2950
Width	mm	1165	1165	1165
Height w/o legs	mm	461	461	461
Height w/ legs	mm	1087	1087	1087
Net weight	kg	90	155	230
Connections				
Outlet - liquid line	inch	7/8″	1″	1-5/4″
Inlet - gas line	inch	1″	1-1/4″	1-5/4″
Heat exchanger(s)				
Quantity		1	1	1
Face area	m²	0.97	1.96	2.94
Coil volume	L	3.2	5.5	7.8
Inlet air velocity	m/s	2.9	2.9	2.9
No. of circuits		1	1	1
Fan(s) - EC-type				
Quantity		1	2	3
Diameter	mm	630	630	630
Airflow - total	m³/s	10000	20000	30000
Rotation speed	RPM	955	955	955
Motor size	kW	1.25	1.25	1.25
External static pressure	Pa	80	80	80
Electrical				
Mains supply		400V/3Ph/50Hz	400V/3Ph/50Hz	400V/3Ph/50Hz
Power input - total	kW	0.47	0.94	1.41
Current - total	A	0.9	1.7	2.6

Condensing temperature: 50°C; Subcooling: 0K; Ambient temperature: 35°C; Air humidity: 50%

DRAWINGS - 400MM FAN UNITS

MCF 750.6-E40-1-1 Unit Models - 1-fan 1-phase

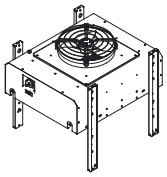

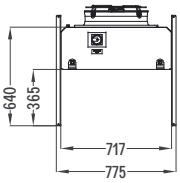

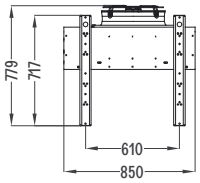

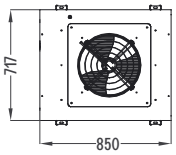

MCF 1500.4-E40-2-1 Unit Models - 2-fan 1-phase

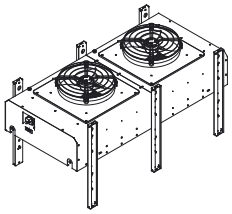

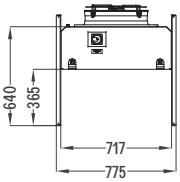

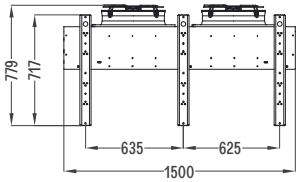

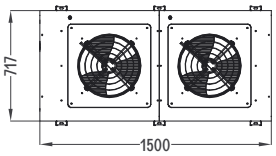

MCF 2000.4-E40-3-1 Unit Models - 3-fan 1-phase

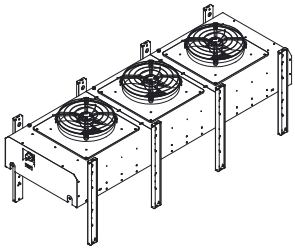

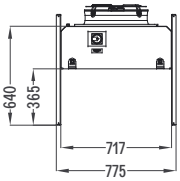

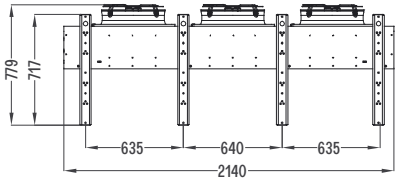

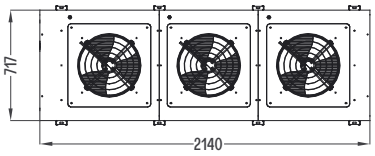

DRAWINGS - 500MM FAN UNITS

MCF 1000.6-E50-1-1 Unit Models - 1-fan 1-phase

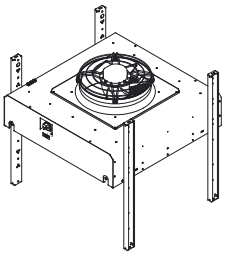

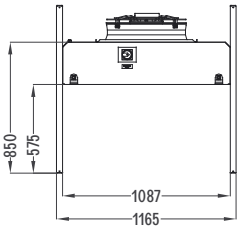

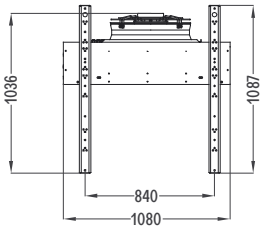

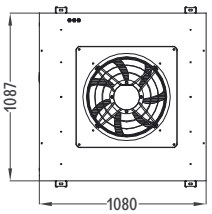

MCF 2000.2-E50-2-1 Unit Models - 2-fan 1-phase

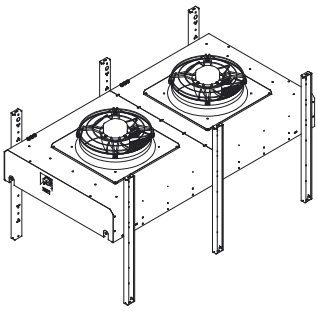

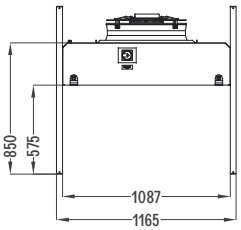

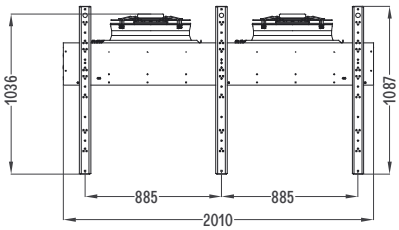

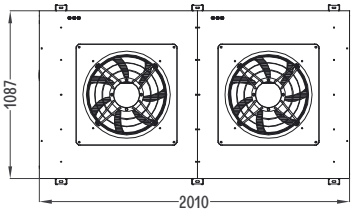

MCF 3000.2-E50-3-1 Unit Models - 3-fan 1-phase

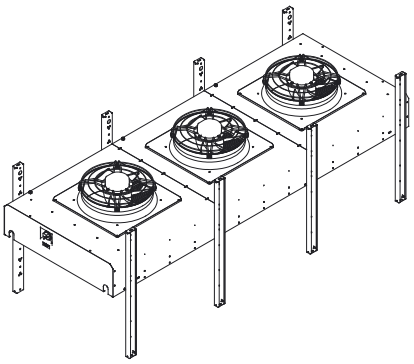

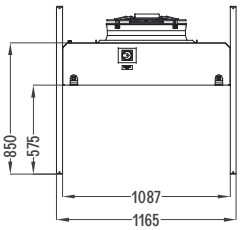

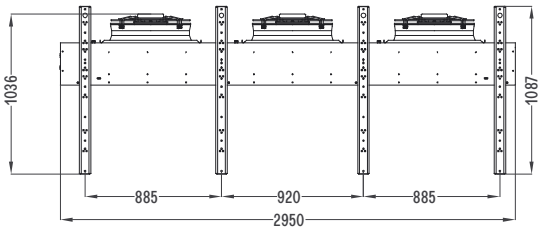

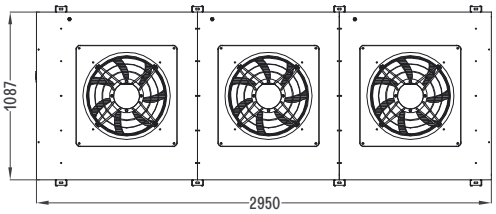

DRAWINGS - 630MM FAN UNITS

MCF 1000.6-E63-1-3 Unit Models - 1-fan 3-phase

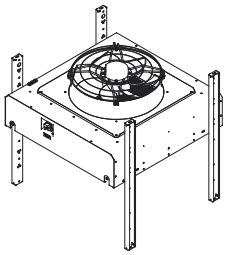

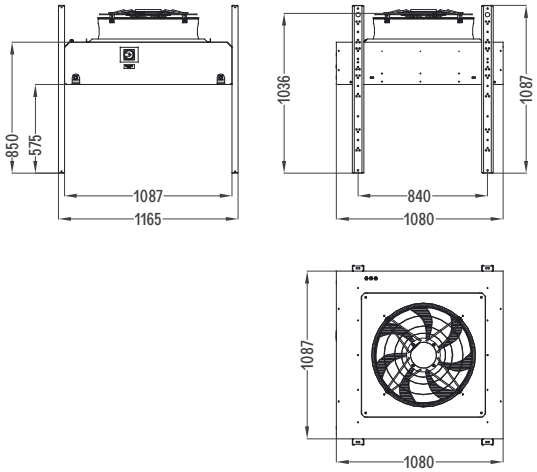

MCF 2000.2-E63-2-3 Unit Models - 2-fan 3-phase

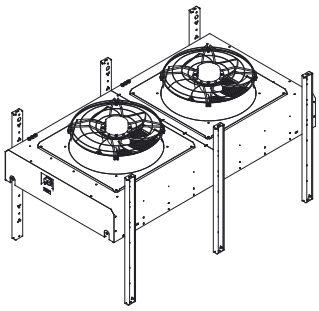

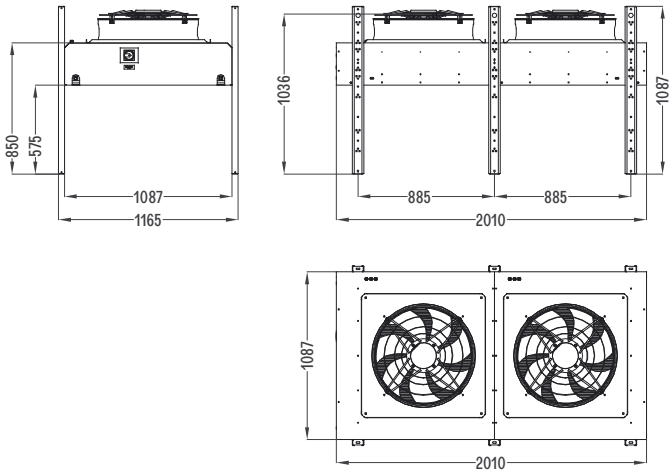

MCF 3000.2-E63-3-3 Unit Models - 3-fan 3-phase

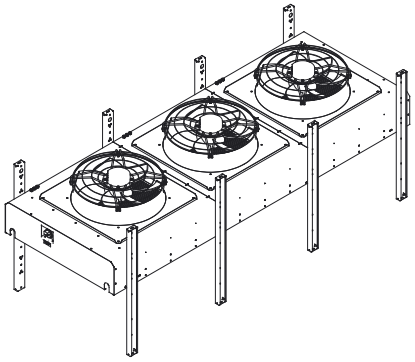

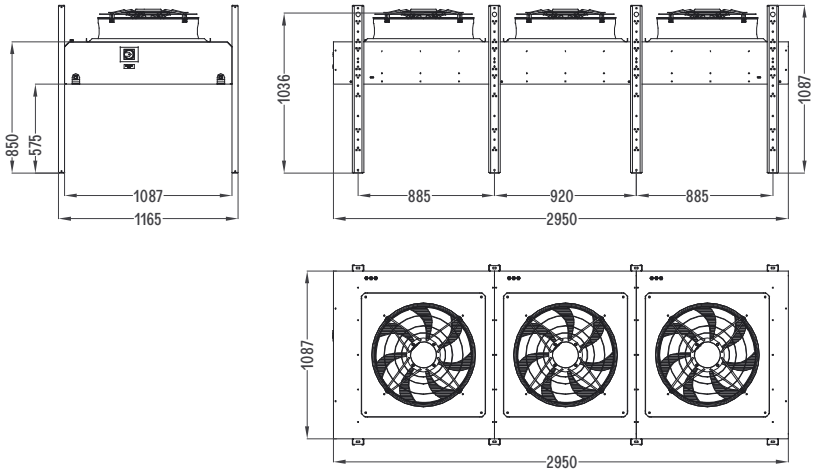

NOTES

Kaltra Innovativtechnik GmbH

Head office:

Max-Reger-Str. 44
90571 Schwaig
Germany

+49(0)911 715 32021

info@kaltra.de

www.kaltra.com